REVISION TABLE					
REV	ECN#	DESCRIPTION	REV BY	APPROVED	DATE
---	---	Original Drawing	OOG	MPW	9-20-19

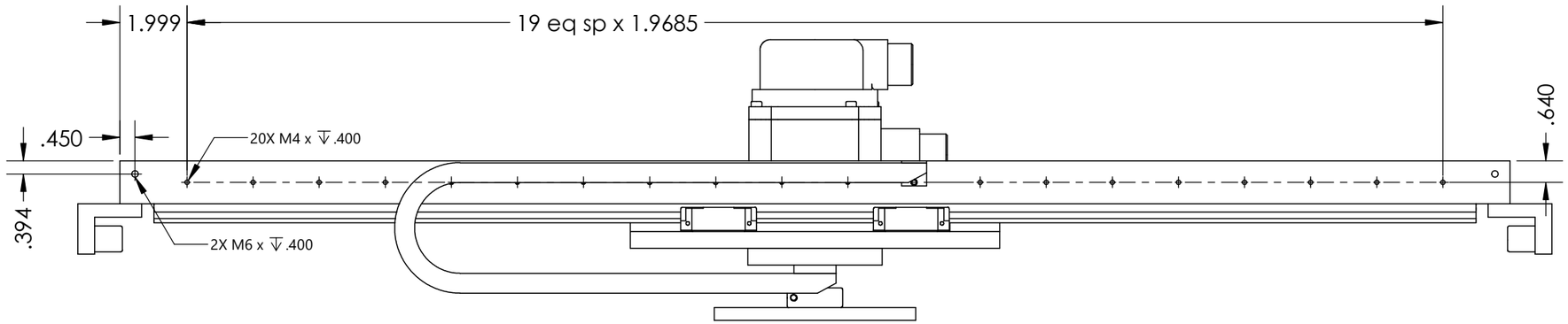

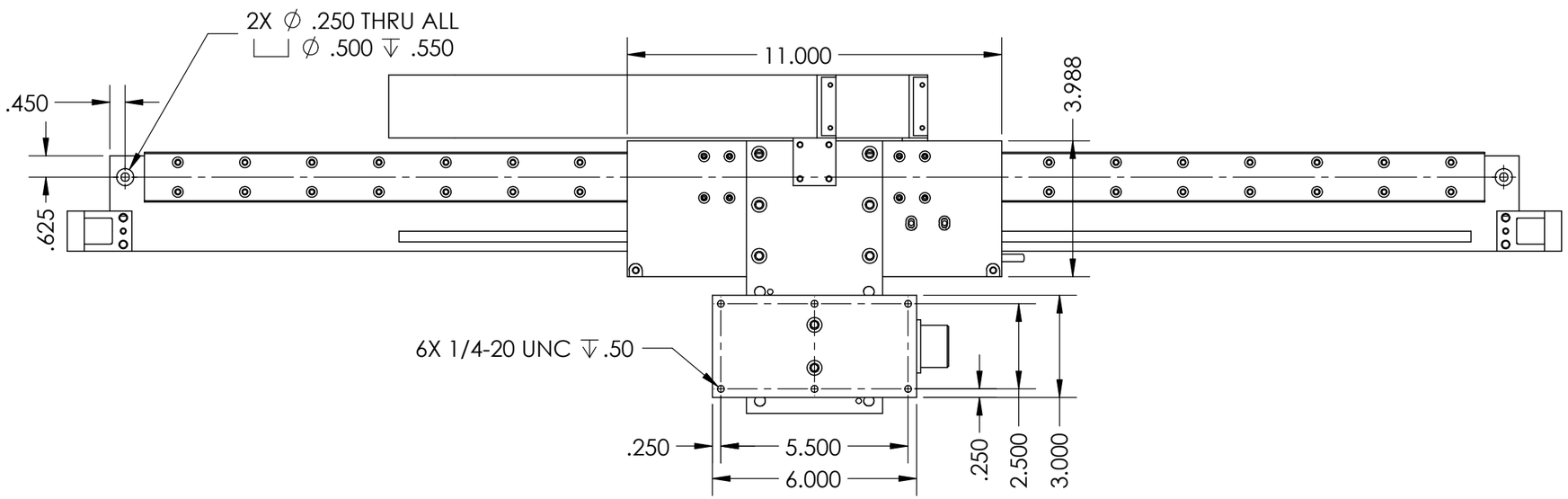

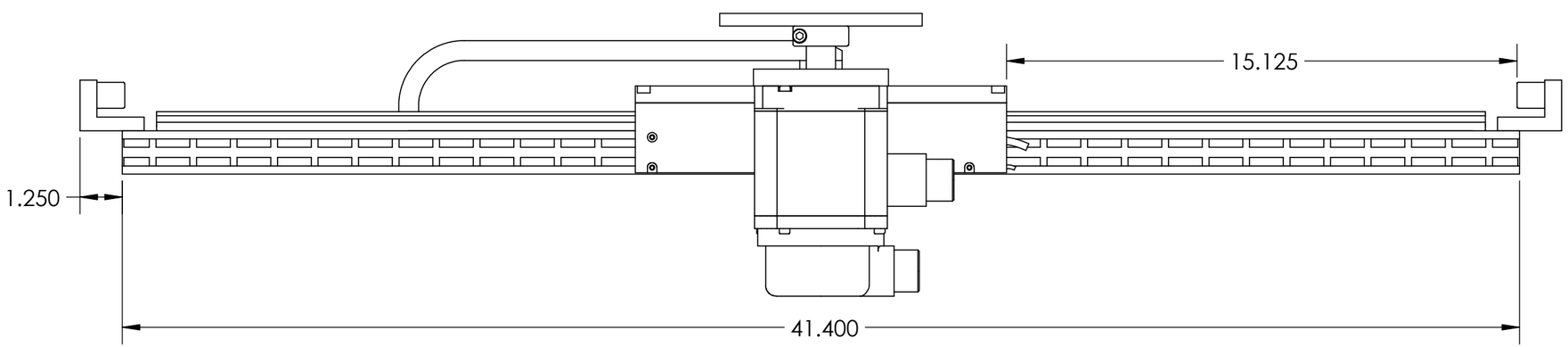

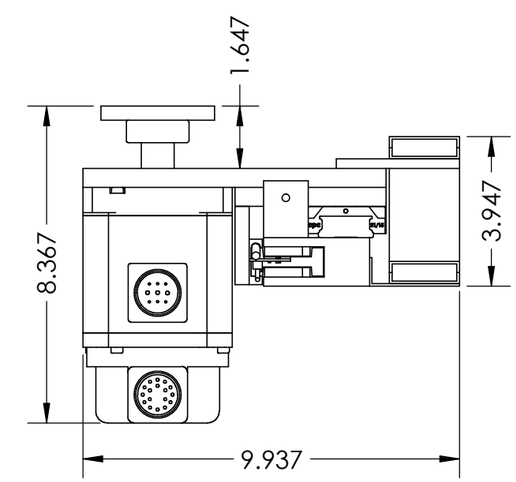

MOTOR SHOWN AT MID-STROKE

H2W Technologies, Inc.
Santa Clarita, CA 91350 USA
Tel: (661) 291-1620
www.h2wtech.com

These drawings and specifications are the property of H2W Technologies, Inc. They are issued in confidence and shall not be reproduced, copied, or used without written permission from H2W Technologies, Inc.

UNLESS SPECIFIED OTHERWISE:
All dimensions are in inches
Standard Tolerances are as follows

.XXX	±.005	ANGLES	±.1°
.XX	±.010	FILLETS	.010
.X	±.020	CORNERS	.010

Remove All Burrs and Sharp Edges

FOR REFERENCE ONLY

MATERIAL

FINISH

TITLE

Multi-Axis Positioning Stage

Model #: SRT-030/360-026-01

DWG # **40-0458**

REV **----**

DATE 9-20-19

SHEET 1 of 2

MULTI-AXIS POSITIONING STAGE SPECIFICATIONS			
Linear Axis	Motor P/N	BLDM-C08	
	Stroke	30.25 in	768 mm
	Encoder Resolution	1 micron	
	Bearing Type	Recirculating Ball	
	Resistance @ 20C	21.1 ohms	
	Inductance @ 20C	21.2 mH	
	Electrical Time Constant	1 msec	
	Motor Constant	2.97 LBS/SQRT(Watt)	13.3 N/SQRT(Watt)
	Force Constant	13.7 LBS/Amp	60.9 N/Amp
	Back EMF	1.55 V/ips	60.9 V/m/sec
	Force @ 100% Duty	26 lbs	115.6 N
	Power @ 100% Duty	99 watts	
	Current @ 100% Duty	1.9 amps	
	Force @ 10% Duty	78.2 lbs	347 N
	Power @ 10% Duty	891 watts	
	Current @ 10% Duty	5.7 amps	
Rotary Axis	Motor P/N	SLV-210	
	Stroke	360°	
	Encoder Resolution	10000 counts/rev	
	Bearing Type	Recirculating Ball	
	Resistance @ 20C	2.05 ohms	
	Inductance @ 20C	8.4 mH	
	Electrical Time Constant	1.7 msec	
	Torque constant-KT	0.56 N·m/A	
	Voltage constant-KE	58.4E-3 V/rpm	
	Force @ 100% Duty	29.2 lb in	3.3 Nm
	Power @ 100% Duty	95 watts	
	Current @ 100% Duty	6.8 amps	
	Force @ 10% Duty	87.6 lb in	9.9 Nm
	Power @ 10% Duty	716 watts	
	Current @ 10% Duty	18.7 amps	
System	Stage Length	42.1 in	1069 mm
	Stage Width	9.94 in	252.5 mm
	Stage Height	8.37 in	213 mm
	Moving Mass	20 lbs	9.1 kg
	Total Mass	61 lbs	28 kg

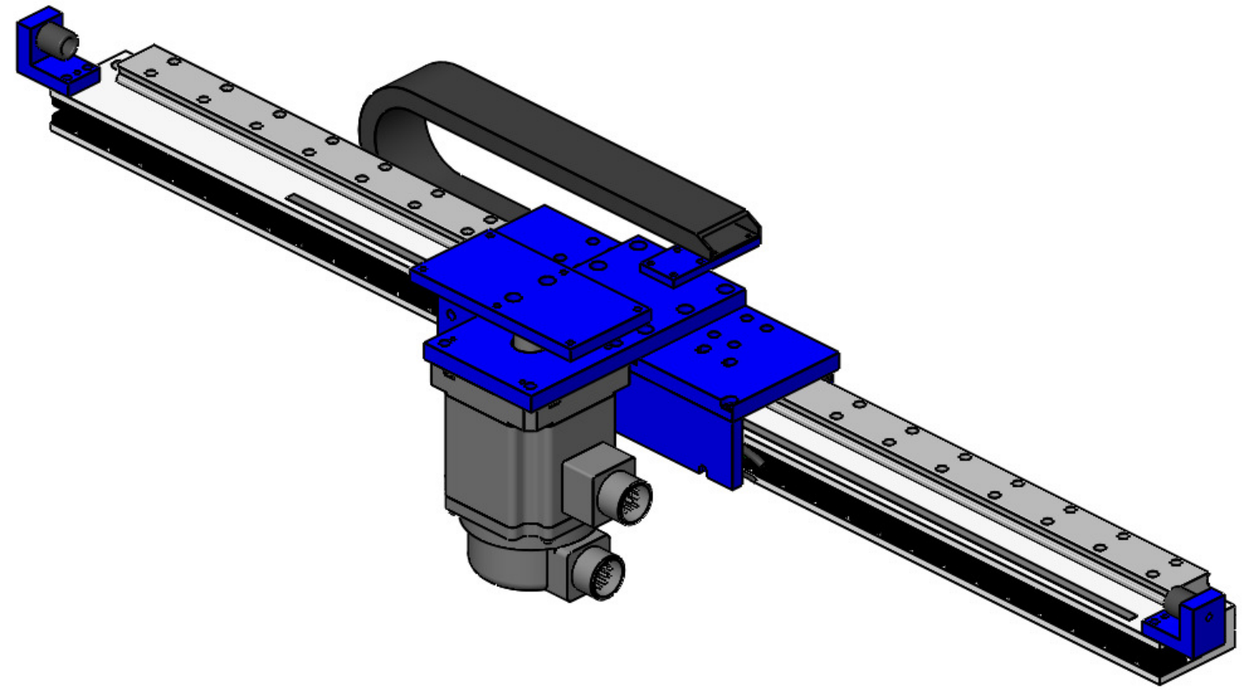

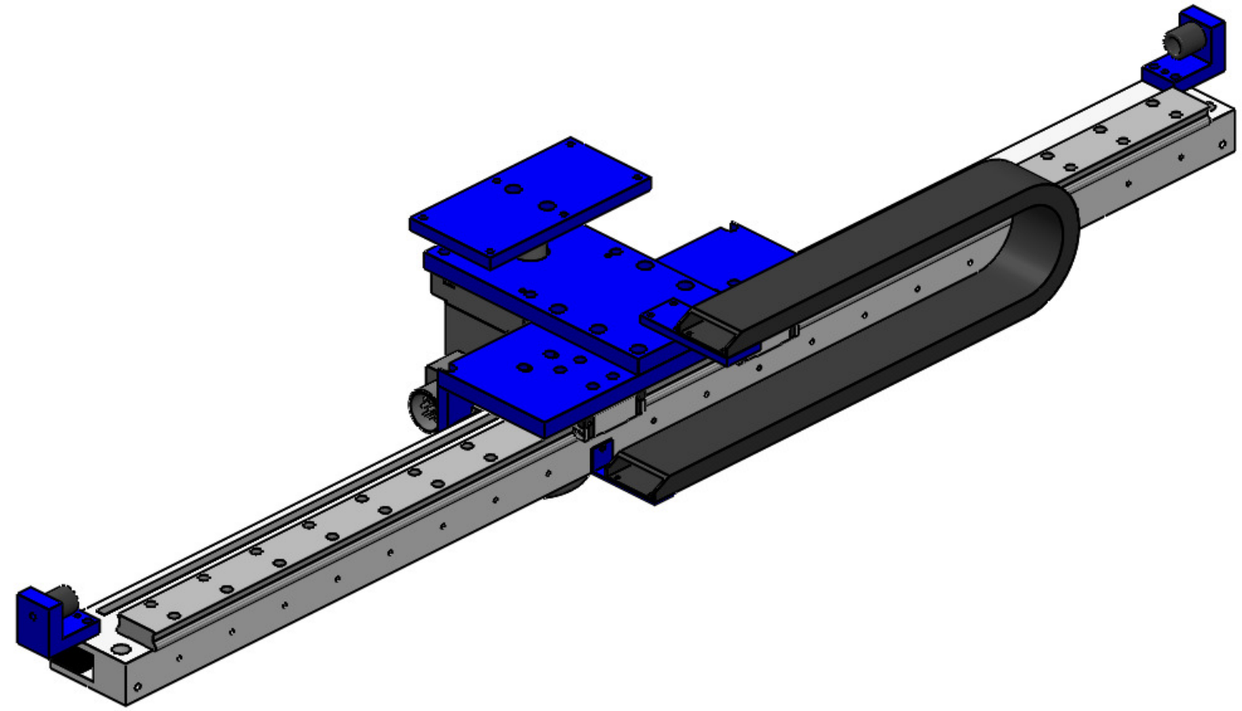

H2W Technologies, Inc.
Santa Clarita, CA 91350 USA
Tel: (661) 291-1620
www.h2wtech.com

These drawings and specifications are the property of H2W Technologies, Inc. They are issued in confidence and shall not be reproduced, copied, or used without written permission from H2W Technologies, Inc.

UNLESS SPECIFIED OTHERWISE:
All dimensions are in inches
Standard Tolerances are as follows

.XXX	±.005	ANGLES	±.1°
.XX	±.010	FILLETS	.010
.X	±.020	CORNERS	.010

Remove All Burrs and Sharp Edges

FOR REFERENCE ONLY

TITLE
Multi-Axis Positioning Stage
Model #: SRT-030/360-026-01

DWG # **40-0458**
REV **----**
DATE 9-20-19
SHEET 2 of 2